Name	Height	Vol.	Weight
JM-S-1035-2.5T	910mm	38.3L	

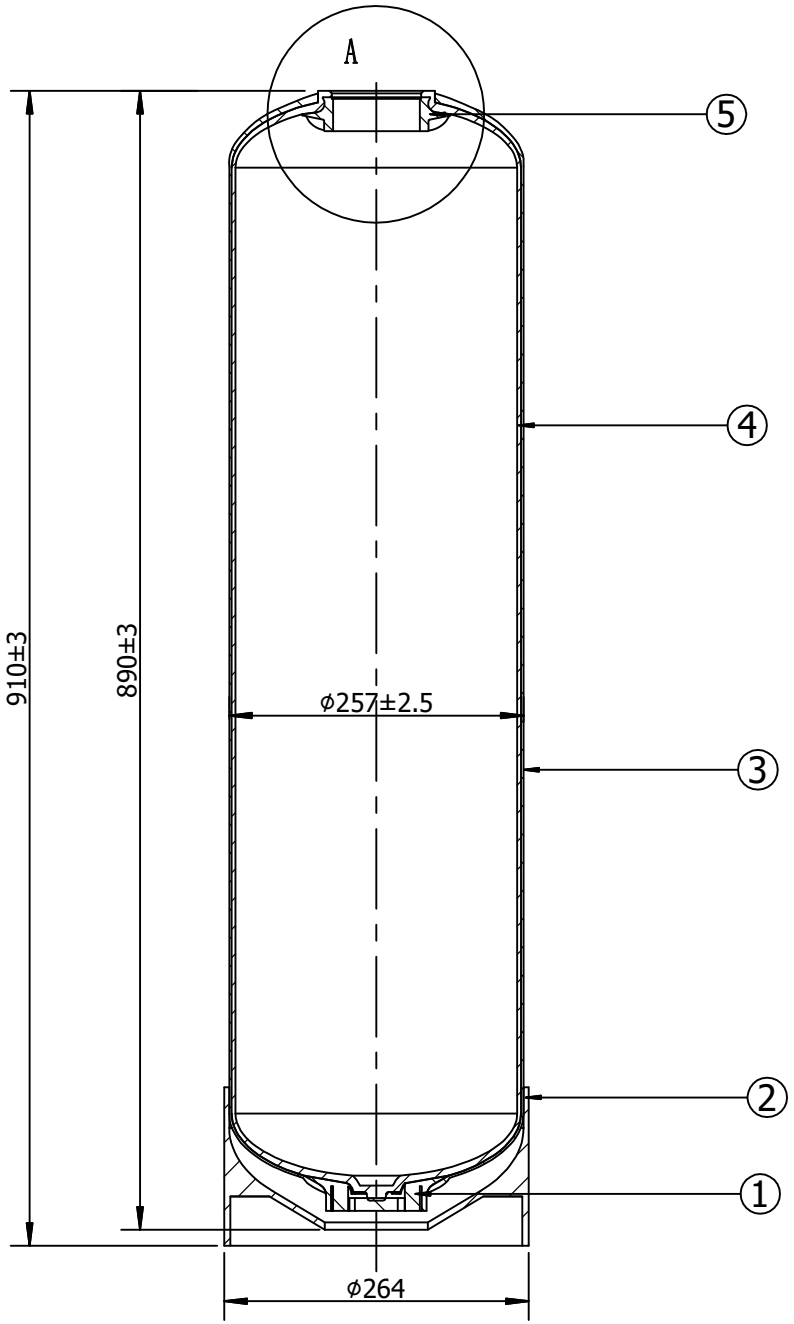

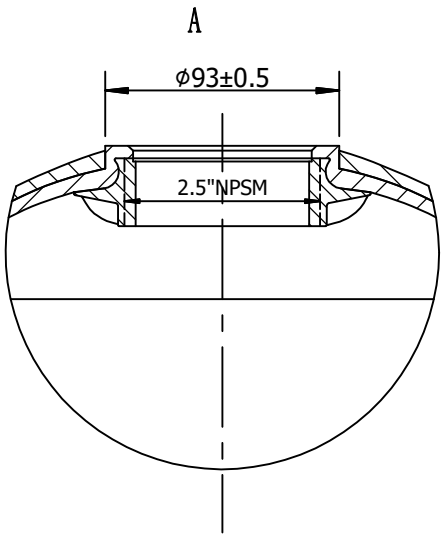

NOTES:
1. Inner shell - Polyethylene (PE) seamless one-piece tank liner
2. Outer shell - Continuous strands of fiber-glass with high strength epoxy resin
3. Bottom base - FRP reinforced tripod base
4. Opening - 2.5 inch thread opening
5. Tanks meet all applicable specification of NSF/ANSI 044 standard
6. Operating Specifications:
   Maximum Working Pressure : 150 PSI (1.0MPA)
   Temperature :1-49 C (34-120 F)
   Maximum Vacuum:127mm Hg(5”Hg)
7. Liner inspection
   No more than 20 internal 、external blemishes、burnt debris
   No internal 、external blemishes、burnt debris larger than 5 *5 mm
8. Surface finish
9. Surface to be free of resin, glass,nicks,barbed filament
10. Tank to be bonded to base
11. The base to be level correction
12. Top and bottom opening to be parallel,top opening to be parallel with the base

NO.	NAME	COUNT	MATERIAL	REMARK
5	2.5"NPSM	1	PPO、MODIFIDE PP	
4	LINER	1	PE	
3	OUTER SHEEL	1	FRP	
2	BASE	1	MODIFIDE PP	
1	BOTTOM ROTECTION	1	ABS	

Subsidiary Column

标记	处数	分区	更改文件号	签名	日期

Jieming International Trading FZCO
Ewater

设计			标准化			阶段标记	重量(Kg)	比例	
审核									JM-S-1035-2.5T
工艺			批准						