| Model | Height | Vol | Weight |
|---|---|---|---|
| JM-S-3072-4T4B | 1850mm | 690L | |

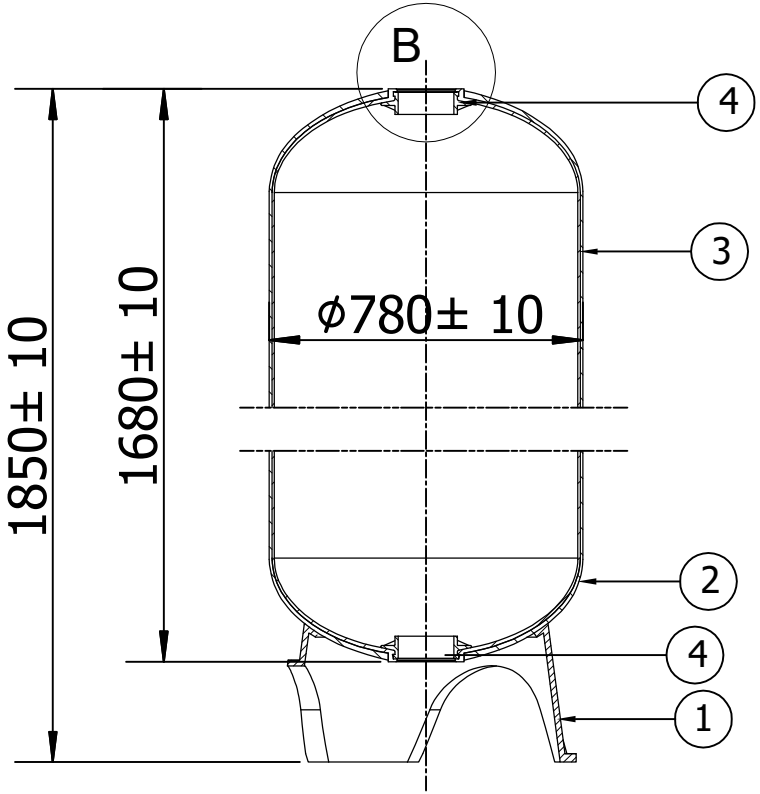


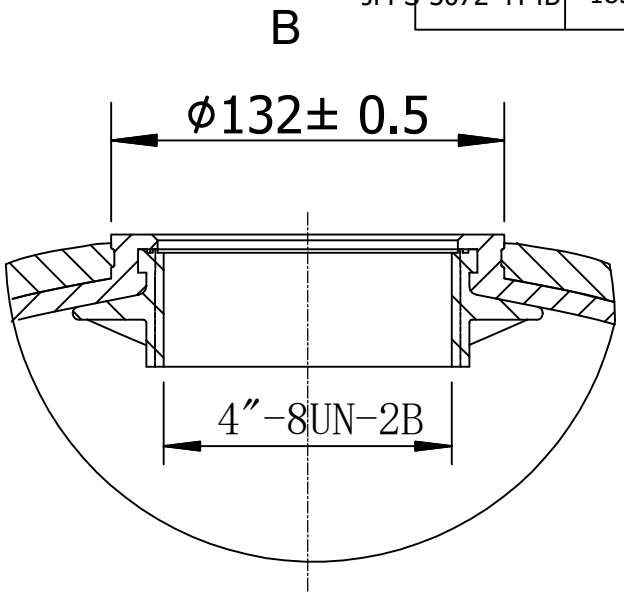


NOTES:
1. Inner shell - Polyethylene (PE) seamless one-piece tank liner
2. Outer shell - Continuous strands of fiber-glass with high strength epoxy resin
3. Bottom base - FRP reinforced tripod base
4. Opening - 4 inch thread opening
5. Tanks meet all applicable specification of NSF/ANSI 044 standard
6. Operating Specifications:
   Maximum Working Pressure : 150 PSI (1.0MPA)
   Temperature :1-49 C (34-120 F )
   Maximum Vacuum:127mm Hg(5”Hg)
7. Liner inspection
   No more than 20 internal 、external blemishes、burnt debris
   No internal 、external blemishes、burnt debris larger than 5 *5 mm
8. Surface finish
9. Surface to be free of resin, glass,nicks,barbed filament
10. Tank to be bonded to base
11. The base to be level correction
12. Top and bottom opening to be parallel,top opening to be parallel with the base

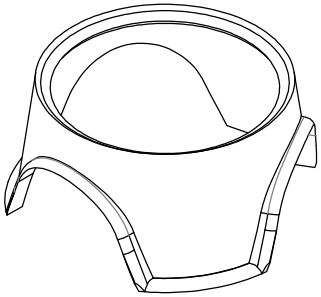

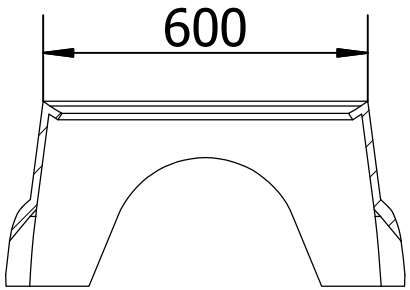


| NO. | NAME | COUNT | MATERIAL | REMARK |
|---|---|---|---|---|
| 4 | 4″-8UN | 2 | PPO | |
| 3 | Linner | 1 | PE | |
| 2 | OuterShell | 1 | FRP | |
| 1 | Base | 1 | SMC | |

Subsidiary Column

| 标记 | 处数 | 分区 | 更改文件号 | 签名 | 日期 |
|---|---|---|---|---|---|
| 设计 | | | 标准化 | | |
| 审核 | 检测人 | 检测日期 | | | |

Jieming International Trading FZCO
Ewater

| 阶段标记 | 重量(Kg) | 比例 |
|---|---|---|
| | | |

本图尺寸均以mm计，图中尺寸请勿量取。

JM-S-3072-4T4B