Model	Height	Vol	Weight
JM-S-7294-6T6B	2400 mm	3561 L	

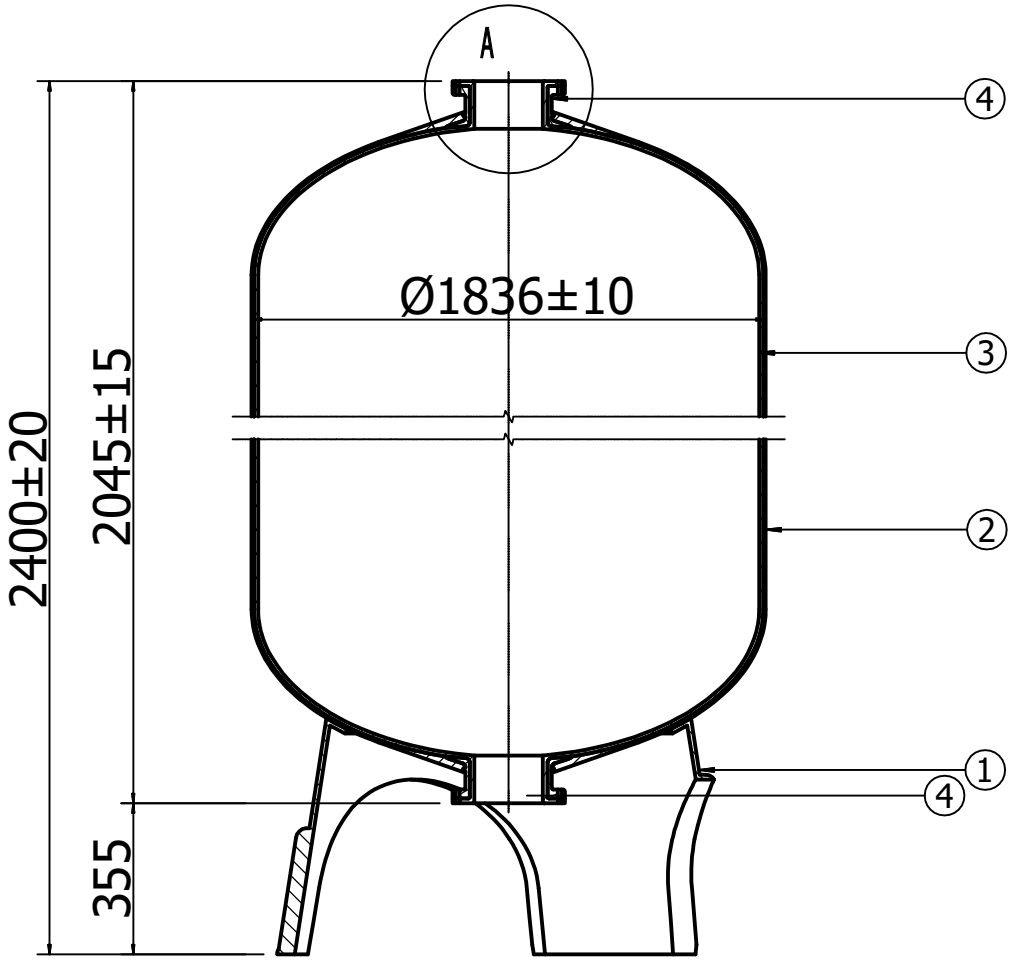

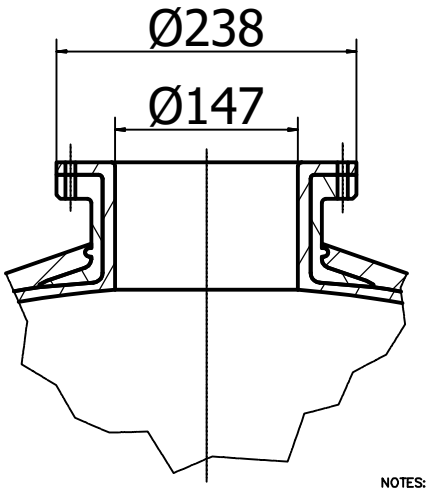

NOTES:
1. Inner shell – Polyethylene (PE) seamless one–piece tank liner
2. Outer shell – Continuous strands of fiber–glass with high strength epoxy resin
3. Bottom base – FRP reinforced tripod base
4. Opening – 6 inch Aluminium opening
5. Tanks meet all applicable specification of NSF/ANSI 061 standard
6. Operating Specifications:
   Maximum Working Pressure : 150 PSI (1.0MPA)
   Temperature :1–49 C (34–120 F)
   Maximum Vacuum:127mm Hg(5'Hg)
7. Liner inspection
   No more than 20 internal 、external blemishes、burnt debris
   No internal 、external blemishes、burnt debris larger than 5 *5 mm
8. Surface finish
9. Surface to be free of resin, glass,nicks,barbed filament
10. Tank to be bonded to base
11. The base to be level correction
12. Top and bottom opening to be parallel,top opening to be parallel with the base

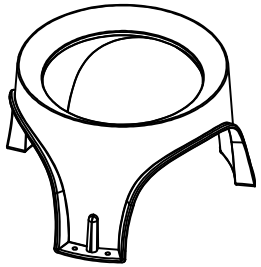

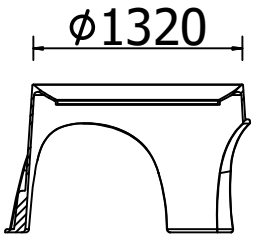

NO.	NAME	COUNT	MATERIAL	REMARK
4	6"Flange	2	Aluminum	
3	Linner	1	PE	
2	Outer Shell	1	FRP	
1	Base	1	SMC	

Subsidiary Column

Jieming International Trading FZCO
Ewater

标记	处数	分区	更改文件号	签名	日期
设计			标准化		
审核	检测人	检测日期			

阶段标记	重量(Kg)	比例

本图尺寸均以mm计，图中尺寸请勿量取

JM-S-7294-6T6B